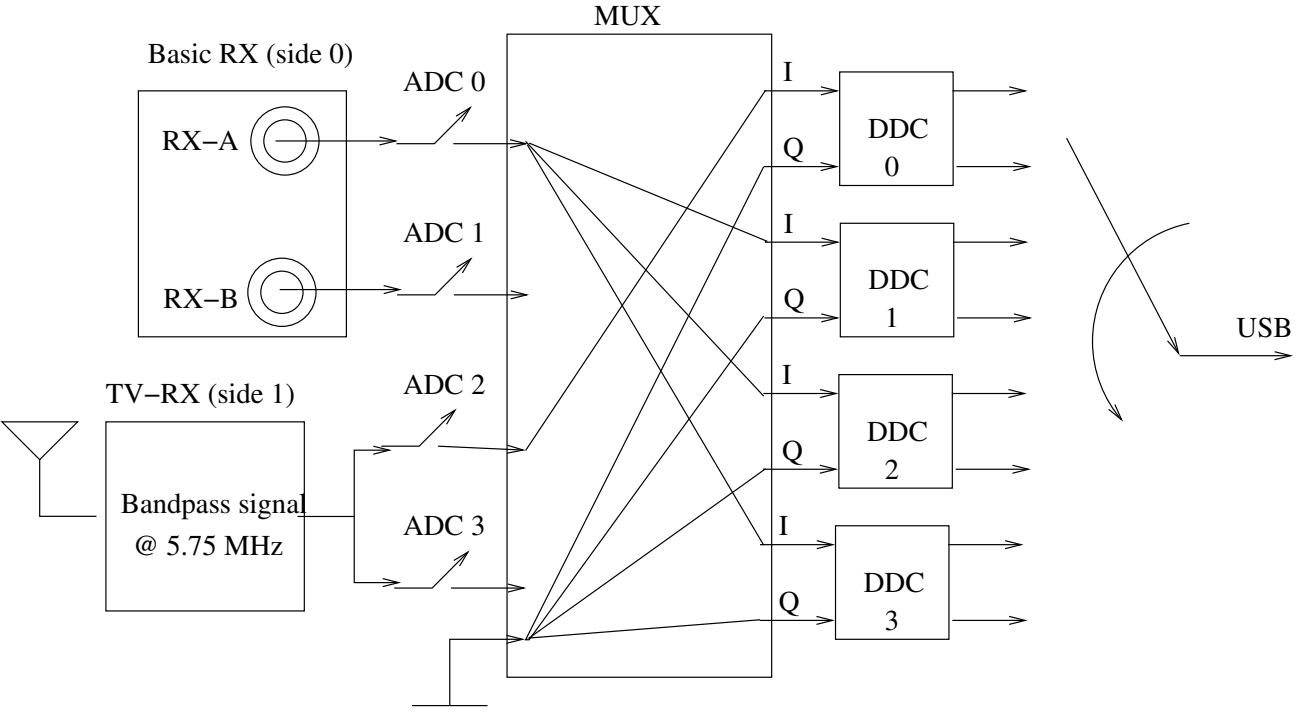

Mux setup for TV−RX in side 1 according to usrp_wfm_gui.py 0x f0 f0 f0 f2